NOVA LUCE

9345652

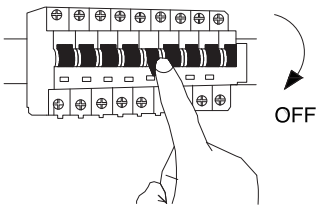


1. Turn off the general switch

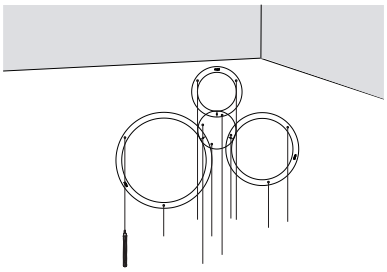

2. Mark where to drill holes

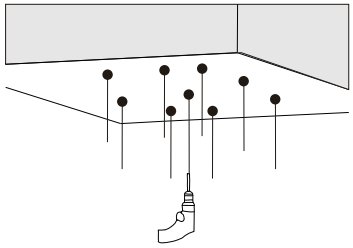

3. Drill on the marked areas

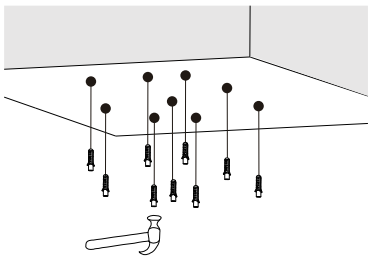

4. Apply plastic anchors

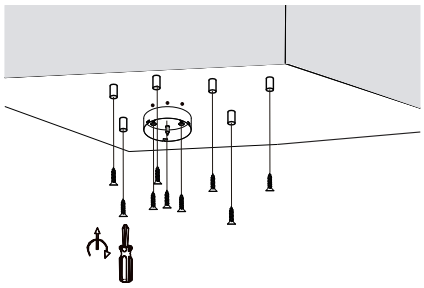

5. Apply screws

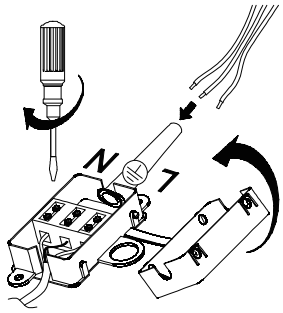


6. Connect the wires

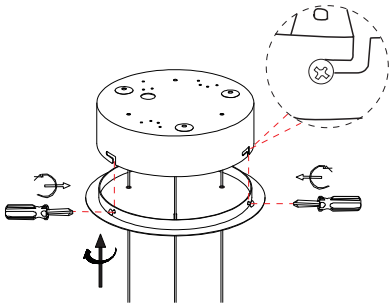

7. Apply side screws and make Hanging elements stable

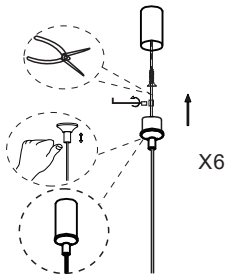


8. Adjust the wire & fix it into place

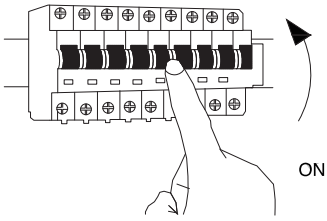


9. Turn on the general switch

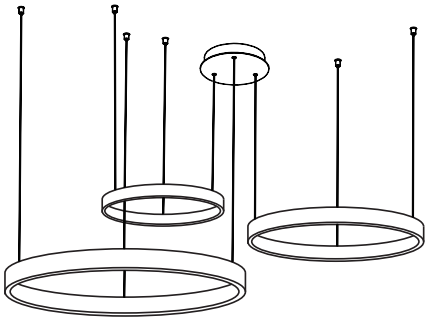

www.novaluce.com